WEVD COMMISSION MEETING AGENDA
Wednesday, May 21, 2025, at 6 p.m.
Community Center, 562 Winterbrook Rd., Campton, 03223
with Zoom access
Will be streamed on YouTube

1. Call to order
2. Pledge of Allegiance
3. Roll Call of Commissioners
4. If remote attendance, reason & vote
5. Adoption of Agenda
6. Public Hearing: To accept and expend $20,000 from WEA to offset 2025 WEVD recreational expenses
7. Approval of Minutes
    a. May 7, 2025
8. Treasurer's Report
9. GM's Report
10. Committee / Board Reports:
    a. Planning Board
    b. Water & Roads
    c. Budget Advisory
    d. Records
11. CONSENT CALENDAR
    a. Manifests
    b. Committee/Board reports
12. GENERAL CALENDAR ITEMS
    a. Commissioner Values for Legislative Advocacy
    b. Amerigas Propane Contract
    c. CIP Committee Membership
13. Next Meeting: Tuesday, June 3, 2025 @ 6 PM – regular meeting and public hearing to set water rates for 2nd billing of 2025
14. Public Comment Period
15. Non-Public Session
16. Adjourn Meeting

562 Winterbrook Road, Campton, NH 03223
Phone: (603) 726-3082 | Fax: (603) 726-8611
www.waterville-estatesnh.gov

WEVD Public Hearing Policy

1. The Chair (or other Commissioner in the Chair's absence or to whom the Chair designates the role) will open the hearing by announcing the purpose of the Public Hearing and summarizing these rules by which people may participate.
2. The Chair will ask all persons attending the hearing at the physical location to print their names and addresses on the sign-in sheet.
3. The Chair will ask all persons who are attending remotely online to either send an email to the District at district@waterville-estates.com, or indicate at the appropriate time their desire to speak. The email requests can be made at any time during the hearing. A staff member as designated by the Chair will compile a list of names and addresses in the order the notice is received from those attending remotely. Once those on the list have been allowed to speak, others who are remote will have an opportunity to speak.
4. The Chair will ask all persons who are attending remotely on their telephones to call into the Community Center and a staff member as designated by the Chair will compile a list of all those telephonic attendees (names & addresses) who wish to speak. There should be no difficulty leaving the Zoom meeting to place this call and then re-entering the meeting. THE NUMBER TO MAKE SUCH A REQUEST IS 603-726-3082.
5. An explanation of the item(s) under discussion at the Public Hearing will be given by the Commission or its designees (staff, engineers, etc.). The Commissioners may ask questions to clarify or expand upon what has presented. If it is a Petitioned Article, the petitioner will have up to 10 minutes to explain the Petitioned Article.
6. The Chair will then open the meeting for public input. Each member of the public will be granted up to five (5) minutes to speak. Members of the public can only speak one (1) time until everyone has had a chance to speak. Commissioners or staff may respond but are not required to respond.
7. The Chair will first recognize those attending the physical location where the meeting is broadcast to speak during the public hearing.
8. After every member of the public who is present has had the opportunity to speak once, the Chair will call a brief recess to obtain the list of those attending remotely by Zoom or phone who have made a request to speak. They will be allowed to speak up to 5 minutes in length.
9. Once all members of the public who wish to address the Commission have had an opportunity to speak once, any member of the public who wishes to speak again will be given an opportunity to speak for up to five (5) minutes.

10. The Chair will then ask the Commissioners and staff if they have any additional comments.
11. The Chair will then close the Public Hearing.
12. The Chair will then consider any motions to be made at this time on the subject matter of the Public Hearing.

Adopted & Effective on February 16, 2022
Amended on October 12, 2023

WEVD COMMISSIONER MEETING PROCEDURES

1. THE COMMISSIONERS WILL POST AN AGENDA AT LEAST TWENTY-FOUR (24) HOURS PRIOR TO HOLDING MEETINGS. EMERGENCY MEETINGS ARE EXEMPT.
2. A MEMBER OF THE PUBLIC MAY REQUEST ITEMS TO BE PLACED ON THE AGENDA.
    A. REQUEST MUST BE MADE TO BOTH THE GENERAL MANAGER AND ASSISTANT GENERAL MANAGER AT LEAST 10 DAYS PRIOR TO A SCHEDULED MEETING.
    B. THE REQUEST MUST CONTAIN THE SUBJECT MATTER OF THE REQUEST.
    C. THE FINAL DECISION TO ALLOW REQUESTS FROM THE PUBLIC RESIDES WITH THE COMMISSION.
3. THE COMMISSION MAY ASK FOR A REPRESENTATIVE FROM THE WATERVILLE ESTATES ASSOCIATION BOARD OF DIRECTORS TO SPEAK REGARDING WEA ACTIVITIES, CONCERNS, ETC.
4. RECORDING A MEETING OF THE PUBLIC BODY IS ALLOWED. VIDEO EQUIPMENT WILL BE ALLOWED AT THE MEETING SITE AND WILL BE PLACED AT LOCATIONS DESIGNATED BY THE COMMISSION.
5. ZOOM OR OTHER REMOTE ACCESS / ELECTRONIC PLATFORM ACCESS WILL BE PROVIDED FOR COMMISSION MEETINGS. A LINK OR MEETING INFORMATION TO GAIN ACCESS WILL BE INCLUDED IN MEETING NOTICES. FAILURE TO BROADCAST WILL NOT BE GROUNDS FOR CANCELLING A COMMISSION MEETING.
6. NO MEETING ADMINISTRATOR OR OTHER PERMISSION WILL BE REQUIRED FOR REMOTE RECORDINGS OF PUBLIC SESSIONS OF COMMISSIONER MEETINGS THROUGH ZOOM OR ANY OTHER PLATFORM UTILIZED BY THE COMMISSION.
7. ANY ATTENDEE WILL BE GRANTED UP TO THREE (3) MINUTES TO MAKE A STATEMENT AT THE END OF THE MEETING ON WEVD MATTERS. TOTAL TIME FOR PUBLIC COMMENT WILL BE LIMITED TO 15 MINUTES.
8. THE COMMISSIONERS RESERVE THE RIGHT TO ALLOW EXCEPTIONS TO THIS POLICY.

562 Winterbrook Road, Campton, NH 03223
Phone: (603) 726-3082 | Fax: (603) 726-8611
www.waterville-estatesnh.gov

WEVD Commission DRAFT Meeting Minutes
May 7, 2025 – 4 PM

Attendees: Commissioners Gerry Panuczak, Mark Canfield, General Manager Ron Beard, Municipal Assistant Allison Smith

Members of the Public: N/A

Members of the Public on Zoom: Bobbi Ketcham, Scott Sallaway

Members Excused: Maureen Patti

Call to Order: Commissioner Panuczak called the meeting to order at 4:00 PM.

Pledge of Allegiance: The meeting began with the Pledge of Allegiance.

Roll Call of Commissioners: Mr. Canfield and Mr. Panuczak were present in person.

Adoption of Agenda
Agenda adopted as written.

Approval of Minutes

a. **April 23, 2025**
   Mr. Panuczak noted that Ms. Patti, although not present today, had submitted a list of seven written amendments, which were in the packet, and that he would like to add three oral amendments. Page 3, line 116: correct committee name to Water & Roads Committee. Page 4, line 122: correct committee name to Records & Retention Committee. Page 7, line 263: remove duplicative statement to read "in person."

Mr. Panuczak motioned to amend the draft minutes April 23, 2025, according to the list of written motions contained in the handout, and three additional oral amendments. Mr. Canfield duly seconded. Motion carried with a 2:0 roll call vote: Mr. Panuczak – aye, Mr. Canfield – aye.

Mr. Panuczak motioned to make the amended April 23, 2025 minutes the official meeting minutes. Mr. Canfield duly seconded. Motion carried with a 2:0 roll call vote: Mr. Panuczak – aye, Mr. Canfield – aye.

Treasurer's Report
There was none.

DRAFT

General Manager's Report

Mr. Beard spoke about the following:

1. Shawn Pelchat and his team began filling the outdoor pools.
2. Steve Baert has been identifying water leaks while Lauren Bennett has been york raking the District's dirt roads.
3. Mr. Beard and WEA board representative Dave Ketcham met with a new point of sale (POS) system operator, Square. Mr. Beard received a quote and forwarded it to the WEA board with no response as of yet. Mr. Beard feels it will suit the needs of the District well.

Mr. Panuczak asked Mr. Beard for an update on the infrastructure upgrades that Mr. Pelchat was doing. Mr. Beard stated that everything was progressing well and Mr. Pelchat hopes to be testing out the system in the next few days.

Mr. Panuczak asked if Mr. Beard was recommending the District move to a new POS. Mr. Beard stated he was. Her further explained that Square's quote was far more cost effective than competitors due to reusability of the hardware and monthly subscription fees and that annually, the costs for Square are lower than the current POS system. Mr. Beard also recommends that the onsite services listed in the quote be utilized. This service means a team is sent out to do the system programming which will also act as a training session for staff. Both Mr. Beard and Ms. Smith feel that it will alleviate many of the issues that bar and office staff face on a regular basis. Mr. Beard also stated that this system will have a ordering kiosk and online ordering which will allow for reduced ordering wait times and increased accessibility for patrons.

Mr. Canfield suggested that the Commission move forward with this quote but did voice concern about the nearing soft opening of Memorial Day weekend and how that may be quick for a conversion and staff training. Mr. Beard stated that regardless of when we wanted to switch to Square, he would need to confirm with them now so we can get on their schedule.

Mr. Panuczak motioned to approve $10,008.09 for the acquisition of Square, to come from the $70,000 previously approved to move from the Rec Fund to the District. Mr. Canfield duly seconded.

Mr. Canfield asked if the credit card processing fees were lower with Square than the current system and Mr. Beard stated they were and the deposits will be quicker as well.

Motion carried with a roll call vote 2:0: Mr. Panuczak – aye, Mr. Canfield – aye.

Mr. Panuczak motioned to attach the Square quote dated 05/02/2025 to the meeting's minutes. Mr. Canfield duly seconded. Motion carried with a roll call vote 2:0: Mr. Panuczak – aye, Mr. Canfield – aye.

Mr. Canfield complimented the staff's work in getting the outdoor pools ready for the summer and asked if the heating of the pools was also starting now. Mr. Beard stated that heating the pools starts closer to the soft opening date and will take roughly a week.

Committee/Board Reports

DRAFT

Planning Board
There was no quorum at the last scheduled meeting.

Water & Roads Committee
Mr. Panuczak stated that Water & Roads Committee received an update on the Water Master Plan at their last meeting. The committee also started a discussion regarding the water system's rate structure and the community's changing needs and demographics. Mr. Panuczak continued by explaining the idea of a commercial rate for short-term rentals was brought up but no decisions were made as more research will needs to be done on the issue before it moves forward in any significant way.

Budget Advisory Committee
Has not met but still plans to meet this summer to review financials.

Records & Retention Committee
Ms. Patti was not present to report.

CONSENT CALENDAR

Manifests
Manifests were in the packet.

Committee/Board Reports
There were no written reports to approve.

Mr. Panuczak called for a vote to accept the manifests as presented in the packet. Motion carried with a 2:0 roll call vote: Mr. Panuczak – aye, Mr. Canfield – aye.

Mr. Canfield asked what the check needed by the road department that morning was for. Mr. Beard explained it was for blocks to segregate inventory so each have a designated place in the service yard. Ms. Aguiló complimented the cleanliness of the service yard and the hard work of staff. Mr. Panuczak and Mr. Canfield both reiterated that the District and its staff has done a lot of work to improve the site from its prior life as an illegal dumping ground.

GENERAL CALENDAR ITEMS

Committee Appointments
Mr. Canfield presented Maxine Coyle as a volunteer to be on the Capital Improvement Program (CIP) Committee. Mr. Canfield stated that Ms. Coyle is excited to join the CIP Committee and after speaking with her at length feels that she will be a great fit.

Ms. Smith added that there did not appear to have been a formal motion at the last Commissioner meeting to appoint Denise Aguiló to the Capital Improvement Program (CIP) Committee as the Budget Advisory Committee representative, so she was added to the list of appointments.

DRAFT

Mr. Canfield motioned to appoint Maxine Coyle to the CIP Committee, as listed in the handout. Mr. Panuczak duly seconded.
Ms. Smith asked about the term of the volunteer being appointed. A brief discussion regarding what the term structure of the CIP Committee members would be. Mr. Canfield thought it would be a staggered 3-2-1 year structure to ensure consistency in the committee's work. Mr. Panuczak agreed with Mr. Canfield. Ms. Smith stated that all other District committees except for the Planning Board had 1-year terms, so she assumed this committee would be the same and that she wasn't aware of any statutory requirements in term length for this committee, nor of any specific District procedure. Mr. Panuczak suggested appointing all members listed in the packet with 1-year appointments so the committee can begin working and then revising terms as needed after more research can be done.
Mr. Canfield accepted the friendly amendment to add Denise Aguiló and Linda Ivers for appointment and for all previously stated to have 1-year terms. Motion carried with a 2:0 roll call vote: Mr. Panuczak – aye, Mr. Canfield – aye.

Summer Operations Plan
Mr. Panuczak opened the discussion with a summary of the roles and responsibilities of the District and the Association, both financially and operationally, in the adopted 2024 Recreation Management Agreement (RMA) which was a 2-year agreement. Mr. Panuczak continued that per this agreement, WEA provides a schedule of activities that they would like to see throughout the year.

Mr. Beard presented the 2025 Summer Season's list of events and their projected financial revenues and expenditures. Of what is included in the packet, Mr. Panuczak explained that page one was the band schedule for the season and that pages two through five outlines costs for concessions and events, as well as an estimated profit and loss for the season. Mr. Panuczak explained that with no increase in sales, revenue is expected to be at $15,300, however there is expected to be a 10% increase in sales this summer season.

Mr. Canfield questions why events on the back lawn will be free, even though they are open to the public. He sees it as a missed revenue opportunity, even if owners got in for free and the public were charged a nominal fee. Mr. Beard asked if the Commission's desire was for him to reach out to the WEA BOD regarding the change. Mr. Canfield stated he didn't see this as needing their approval because he is not suggesting changing anything for owners, only the public. Mr. Panuczak agreed.

Mr. Panuczak asked how we were doing on staff. Mr. Beard stated that staffing is well under way with the head chef and lead bartender positions already staffed, and ads have already been placed for kitchen and bar support positions.

Next Meeting: May 21, 2025 at 6 PM, 2 public hearings will also be held at this date and time to accept and expend unanticipated revenue.

Public Comment Period

DRAFT

- Scott Sallaway, 110 Snowood Drive, thanked the Commission for the clear breakdown of the recreation expenses. Mr. Sallaway agreed that owners should not have to pay to access these events as they already pay dues and taxes but stated he feels renters should be charged as they are already paying to enter the facility. Mr. Beard asked if Mr. Sallaway was suggesting that renters must show their day pass to enter the event. Mr. Sallaway said no, he feels renters should be charged to enter the events, even just a nominal fee, in order to recoup money for the events. Mr. Sallaway emphasized the need to properly market events open to the public to generate more money coming in. Mr. Beard thanked Mr. Sallaway for bringing this point forward and recommended that the District utilize EVP Marketing to market to the public for the backyard events. Mr. Panuczak agreed that EVP should be utilized and that management and a member of the WEA BOD should meet with EVP regarding a marketing plan for the summer. Mr. Sallaway stated that he feels there are a lot of people in the area that still don't know about Waterville Estates or how they can access it. Mr. Sallaway also complimented the new chef's work this past weekend.
- Bobbi Ketcham, 111 Hodgeman Hill, wanted to point out that the lawn along the walkway seems to be dying. Mr. Panuczak said yes and stated that there is a grub infestation in that area. Mr. Beard stated that staff have been working on the issue all day and will be treating the area soon with GrubEX and will have staff post a notice on the lawn to alert pet owners so they know to stay away from treated areas.

Mr. Beard also stated that tomorrow staff will be finishing the work started on the flower beds following Community Clean-Up Day and thanked volunteers for all their work this past weekend.

No one else wished to address the Commission.

Non-Public Session

Mr. Panuczak motioned at 5:06 PM to enter non-public session for the purposes described in RSA 91-A:3, II (c), Mr. Canfield duly seconded. Motion carried with a 2:0 roll call vote: Mr. Panuczak – aye. Mr. Canfield – aye.

Non-public session was entered at 5:09 PM. Commissioners Canfield and Panuczak were present in person, as well as the General Manager Ron Beard.

Resumption of Public Session

Mr. Canfield motioned to exit non-public session. Mr. Panuczak duly seconded. Motion carried with a 2:0 roll call vote: Mr. Panuczak – aye, Mr. Canfield – aye.

Public session was entered at 5:51 PM. Commissioners Canfield and Panuczak were present in person.

DRAFT

The nonpublic session minutes were sealed by a motion from Mr. Canfield, and seconded by Mr. Panuczak, as divulgence of the minutes would adversely affect the reputation of any person other than this commission. Motion carried with a 2:0 roll call vote: Mr. Panuczak – aye, Mr. Canfield – aye.

Adjourn Meeting

Mr. Canfield made a motion to adjourn the meeting. Mr. Panuczak duly seconded. Motion carried with a 2:0 roll call vote: Mr. Panuczak – aye, Mr. Canfield – aye.

Meeting adjourned at 5:52 PM.

Prepared by Allison Smith

DRAFT

Square

Quote Date: 5/2/2025
Quote Number: Q-159619
Company: Waterville Estates Village District

Account Representative: Zack Goldberg
Email: zgoldberg@squareup.com

DETAILS

PAYMENT PROCESSING FEES:

Card Present transactions:	2.60% + $ .00/transaction
Card Not Present transactions:	3.50% + $ .15/transaction
API transactions:	2.40% + $ .30/transaction
Invoices transactions:	3.30% + $ .30/transaction

HARDWARE FEES:

Item	Unit Price	Quantity	Discount	Total Price
Square Register Kit	$1,219.00	7.00	$4,266.50	$4,266.50
Apple iPad 64Gb, Wi-Fi, 10th generation, 10.9in - Silver (USB-C)	$349.00	1.00	$349.00	$0.00
Square Stand (2nd generation, USB-C)	$149.00	1.00	$222.01	$-73.01
Bosstab Floor Stand for Square Kiosk	$299.00	1.00	$299.00	$0.00
Square Terminal	$299.00	1.00	$299.00	$0.00
Ethernet Kitchen Printer	$349.00	2.00	$0.00	$698.00
Kitchen Touchscreen Display (15.6)	$499.00	1.00	$469.40	$29.60
Wall Mount for Kitchen Touchscreen Display	$79.00	1.00	$0.00	$79.00
			$5,904.91	$5,000.09

SOFTWARE FEES:

Item	Details	Monthly Price	Discount	Total Monthly Price*
Square for Restaurants Plus 2025		$69.00	$34.50	$34.50
• Square for Restaurants (Mobile POS)	1 Devices	$20.00	$10.00	$10.00
• Square for Restaurants (Additional Device)	6 Devices	$300.00	$150.00	$150.00
Square Online Store Plus		$29.00	$14.50	$14.50
		$418.00	$209.00	$209.00

PROFESSIONAL SERVICES FEES:

Item	What's Included	Total Price
Onsite Services		$2,500.00
		$2,500.00

Quote Summary

SOFTWARE

Item Subtotal	USD 403.50
Discount	(USD 209.00)
Total Monthly Price*	USD 209.00

HARDWARE & PROFESSIONAL SERVICES

Item Subtotal	USD 13,405.00
Discount	(USD 5,904.91)
Total One-Time Price	USD 7,500.09

*You will not be billed for the enterprise service monthly cost detailed above until the conclusion of your 30-day free trial. Upon the conclusion of your free trial, your payment method will be automatically charged the total subscription cost detailed on this page (varying based on plan selections, usage, number of locations, and number of employees), plus any applicable taxes, on the first of each month thereafter, on a recurring basis, unless you cancel. If you start your free trial anytime after the first of the month, you will be charged a prorated amount for your first month after your free trial ends and will then be charged your standard monthly subscription rate, plus taxes, on the first of each month thereafter, on a recurring basis, unless you cancel.

Your bundle subscription includes all listed products. If you choose to unsubscribe from one of the included products, your bundle discount will be cancelled and you will move to individual subscriptions for the remaining products, which may mean a higher monthly cost.

You can always view detailed subscription charges, make subscription changes, or cancel your subscription at any time from your account settings or by contacting us.

WEVD Treasurer Report
5.21.25

Bank of NH - As of:	4.30.25	4.30.25	
	Per Bank	**Per MTS**	**Float**
General Fund	$663,135.17	$686,324.36	$ (23,189.19)
Water Department	$608,613.03	$603,956.96	$ 4,656.07
Credit Card Account	$3,176.62	$3,204.01	$ (27.39)
Totals - BNH	$ 1,274,924.82	$ 1,293,485.33	$ (18,560.51)

Citizens - As of:	4.22.25	4.22.25	
Savings	$ 50,418.46	$ 50,392.76	$ 25.70
Totals – All	$ 1,325,343.28	$ 1,343,878.09	$ (18,534.81)

Campton

	Billed	**Paid**	**Due**	**Interest Received**
2025				
2024	$ 1,153,572.00	$ 1,153,572.00	$ -	$ 1,194.48
2023	$ 1,313,393.00	$ 1,312,519.88	$ 873.12	$ 2,225.48
2022	$ 1,229,625.00	$ 1,187,881.12	$ 41,743.88	$ 3,474.11
2021	$ 1,081,446.00	$ 1,093,153.99	$ (11,707.99)	$ 1,717.17
2020	$ 1,126,745.00	$ 1,121,530.85	$ 5,214.15	$ 4,203.95
2019	$ 1,124,327.00	$ 1,122,635.05	$ 1,691.95	$ 5,449.60
Totals	$ 7,029,108.00	$ 6,991,292.89	$ 37,815.11	$ 18,264.79

Thornton

	Billed	**Paid**	**Due**	**Interest Received**
2025				
2024	$ 383,066.00	$ 361,838.00	$ 21,228.00	$ 287.26
2023	$ 495,793.00	$ 495,785.00	$ 8.00	$ 427.12
2022	$ 390,209.00	$ 390,207.00	$ 2.00	$ 1,182.15
2021	$ 410,452.00	$ 412,499.46	$ (2,047.46)	$ 1,373.62
2020	$ 415,607.26	$ 415,998.42	$ (391.16)	$ 1,486.38
2019	$ 360,718.00	$ 360,518.00	$ 200.00	$ 1,531.55
Totals	$ 2,455,845.26	$ 2,436,845.88	$ 18,999.38	$ 6,288.08

Water Accounts Receivable – As of 4.30.25

Per UMS	**Per MTS**	**Variance**
$16,083.34	$11,575.46	$ 4,507.88

Waterville Estates
Village District

562 Winterbrook Road Campton, NH 03223
Phone: (603) 726-3082 | Fax: (603) 726-8611
www.waterville-estatesnh.gov

GM Report May 21, 2025

1. Shawn Pelchat and his team have done an amazing job in front of the community center with only two flower beds left to complete.
2. The outdoor pools will be opening Friday for Memorial Day Weekend.
3. The District has received the 2025 Sanitary Survey from NHDES. There are a few items that Steve Baert and I will be addressing in the report that need to be clarified.
4. Heather McCarthy has been busy onboarding new bartenders and restocking the bars at the community center.
5. Tony Pierce, our new executive chef has been busy setting up the kitchen to efficiently expedite food orders from his new menu. The menu for Memorial day weekend has been posted. The exciting new menu will have a greater selection beginning in July.
6. The septic tanks at the community center and the ski area have had their annual service with no reported issues.

The State of New Hampshire
Department of Environmental Services

Robert R. Scott, Commissioner

May 13, 2025

Board of Commissioners
Waterville Estates Village District
Campton, NH 03223-9704
Via email: maureen@waterville-estates.com

Subject: Waterville Estates Village District, PWS 0341030
Sanitary Survey 2025

Dear Members of the Board:

On March 25, 2025, the New Hampshire Department of Environmental Services (NHDES) Drinking Water and Groundwater Bureau (DWGB) conducted a sanitary survey on the drinking water system served by Waterville Estates Village District (WEVD). The purpose of the survey was to review the capacity of the water system's sources, treatment, distribution, and management to continually produce safe drinking water. I would like to thank Steve Baert, primary operator, and Ron Beard, general manager, for their assistance in conducting this survey.

SUMMARY

Water system staff interviewed as part of this survey were knowledgeable about the water system and approach their jobs in a professional manner. Water quality monitoring records show that the system is in compliance with current standards and the system is working proactively to update and maintain the system under the guidance of the current operator and new leadership that was in place in 2021. However, there have been singular lead samples that have required follow-up action since the last survey, as detailed in this letter.

This sanitary survey did not identify any significant deficiencies. The following is a list of items that we recommend the managers of the water system consider to maintain compliance, and continue to provide an acceptable level of service to the system's customers:

1. Submit a design for NHDES review for any upcoming changes to the treatment system.
2. Schedule a cybersecurity assessment of your system. Free services are being offered for a limited time.
3. Complete, maintain, and use your Asset Management Program (AMP) for achieving and maintaining the desired level of service at the lowest appropriate cost to customers.
4. Maintain corrosion control water quality monitoring and prepare for the 2027 requirements of the Lead and Copper Rule Improvements (LCRI) including:
   a. updated service line inventories, or "baseline inventories",
   b. service lines replacement plan for any lead piping or galvanized piping requiring replacement,
   c. 24-hour public notification of any lead sample exceedance incorporated into your Emergency Response Plan,
   d. "find and fix" rules for all sample sites exceeding 10 parts per billion (ppb) of lead.
5. Continue moving forward in finding and developing an additional source of drinking water.

6. Install new service meters, zone meters, and perform leak detection for water conservation and rate setting.
7. Consider installing a fence around Pegwood tank.
8. Complete storage analysis for determination on the future of the smaller steel tanks, which are past due for inspection.
9. Complete hydraulic analysis and plan for system upgrades to reduce excessive pressures.
10. Obtain licensing for a backup operator.

A more descriptive discussion on each of these items is included below under "Recommendations".

SYSTEM DESCRIPTION

General

The WEVD water system currently serves approximately 555 residential units, including condominiums and detached residences, plus recreational facilities such as the Community Center and Campton Mountain Ski Area. Population and water demand vary widely with the seasons and vacation schedules, with the estimated population served by the drinking water system of 1500. It is estimated that about one-third of the remaining 200 unbuilt upon lots are actually buildable and represent future water demand.

In general, the water system is comprised of two gravel packed wells, one well station, one combined water treatment plant (WTP) and booster pump station (BPS), five atmospheric storage tanks with three in combination with integrated BPS's and pressure tanks, one additional stand-alone BPS, approximately 26 distribution pressure reducing valve (PRV) pits, and associated piping and appurtenances.

Water Sources

The average daily demand was as low as 90,000 gallons per day (gpd) in 2018 and 100,000 gpd in 2017. After a spike to 160,000 gpd over the next five years (with the exception of 2021), the ADD was 140,000 gpd in 2024.

The water sources are summarized as follows:

Source	DES Data Base 0341030	Well Type	Well Depth (feet)	Existing Yield (gpm / gpd)
GPW 1	001	Gravel well	17	95 / 136,800
GPW 2	002	Gravel well	19	95 / 136,800

The WEVD is served by two gravel packed 'T' wells located off Liberty Lane and about 150 feet from the bank of the Mad River. The wells are equipped with well level transducers and variable speed drives. Recent work includes security fencing replaced around the wells, new pump and motor for GPW 1, and having GPW 2 cleaned. The wells can pump singly at approximately 95 gpm, but at only approximately 172 gpm (approximately 250,000 gpd) in tandem. Based on numbers previously reported by WEVD for maximum day demand, it is unclear if the WEVD, if the wells pumped continuously, can meet peak day demand.

Treatment

Water from the Liberty Lane wells is pumped to the Ski Bowl pumping station via a dedicated 4-inch line. Treatment at Ski Bowl includes aeration and injection of sodium hydroxide (NaOH) for pH elevation, and injection of sodium hypochlorite (NaOCl) for disinfection after a 5,000-gallon steel transfer tank. The WEVD is required to demonstrate a minimum of 4-log (99.99%) disinfection of viruses prior to the first customer through monthly reporting. The data is collected by SCADA and an online analyzer. The station also has an online pH analyzer connected to SCADA. The operator takes daily readings for backup to the SCADA system, which has failed in the past. A 0.9 mg/L chlorine residual is required to maintain the 4-log disinfection level and the operator's treatment goal is 1.4 mg/L. This corresponds to a chlorine residual of approximately 1.1 mg/L at the end of the distribution system.

Chemicals are not currently flow-paced but adjusted manually. The chemical feed pumps are only supplied with power when the transfer pumps to the contact tank are running. The WEVD is currently preparing a change from NaOH to soda ash in 2025. Existing chemical treatment systems for the system are as follows:

Chemical	Purpose	Bulk Storage (gal)	Day Storage (gal)
NaOH (25%)	pH adjustment	450	50
NaOCl (12.5%)	4-log disinfection of viruses	450	50

A design should be submitted to NHDES DWGB with storage and proper containment prior to switchover.

Distribution System

Hydraulic pressure zones are significantly complicated by the extreme variation in terrain covered by the WEVD system. From the primary pressure zones defined by the storage tanks and BPS's, approximately 26 PRV pits are used in locations throughout the system to create secondary zones with pressure acceptable for domestic use. A maximum system pressure of 240 psi was previously observed leaving the Reservoir Road BPS and going uphill into Sunset Tank and the high-pressure zone. Also , approximately 210 psi was observed leaving the Ski Bowl BPS.

The distribution system is comprised primarily of PVC pipe, with a small amount of HDPE and ductile iron pipe, from 2 to 6 inches in diameter and totaling approximately 24 miles. Some recent piping replacements and extensions are constructed of polyethylene. The WEVD has distribution system maps that show the location of piping, valves, many of the PRVs (not all), and curb stops, which are recorded electronically on a Cartographic Associates digital platform.

The WEVD is mainly a residential system with one community center containing various amenities. There are currently no individual customer meters, even though these meters were approved by a 2022 WEVD vote. A majority vote against installation of residential meters was held at the annual 2023 meeting. The WEVD water system is supported primarily by property tax revenue. In 2022, the WEVD began installing distribution zone meters to help identify areas of greater water use and system leaks.

A connection for snow making was recently discontinued as this process now uses a dedicated well. The WEVD maintains cross-connection control plan on file with NHDES.

Finished Water Storage

Water storage tanks and their associated pressure zones are summarized as follows:

Tank	Zone	El. (ft)	Zone Charged By	Construction (year)	Capacity (gal)	Last Inspected
Ski Bowl	Main	1210	Liberty Lane Wells	Steel (pre-2000)	5,000	never
Snow Bowl	Main	1235	Liberty Lane Wells	Buried Steel	22,000	2022
Pegwood	Main	1625	Ski Bowl BPS	Concrete (2008)	200,000	2022
Sunset	High	1580	Ski Bowl or Reservoir Rd	Steel (1993)	20,000	2017
Hilltop	Hilltop	1825	Reservoir Road BPS	Plastic (2006)	1,000	regularly
Pegwood BPS	Pegwood	1625	Pegwood BPS	Hydro (2019)	50	-
Sunset BPS	Sunset	1571	Sunset BPS	Hydro	50	-
Hilltop BPS	Hilltop	1825	Hilltop BPS	Hydro	50	-

For clarification, the Snow Bowl is a tank only, while the Ski Bowl is the WTP and BPS with a smaller 5,000 gallon tank used for aeration/pH adjustment of the water. These assets are all at the same location. A security fence was recently installed around the Snow Bowl tank. The Ski Bowl tank is under consideration for removal. This tank needs to be removed or professionally inspected.

The Sunset tank is also under consideration for removal. An engineer has been hired to determine if any system upgrades are necessary prior to its removal. This tank also needs to be removed or professionally inspected.

The Hilltop tank, which is a non-pressurized plastic tank that serves eight houses, is externally and internally inspected by the operators regularly. Total system storage is approximately 250,000 gallons.

Pumps, Pump Facilities, and Controls

Water is pumped from the well through the Liberty Lane BPS and on to the Ski Bowl. Liberty Lane stores a spare pump and motor to serve as spare parts in the event of a well pump or motor fails. Following chemical treatment at Ski Bowl, water is pumped from the 5,000 gallon transfer tank to a slightly higher-elevation 22,000 steel storage tank. Water is then pumped to the distribution system and a 200,000-gallon Pegwood tank via dual booster pumps. A few homes around the Pegwood tank are fed from a booster pump and hydropneumatics tank inside the Pegwood tank BPS, which also houses an emergency generator.

Water pumped to higher pressure zones is controlled by the Sunset tank (20,000 gallons) from the Ski Bowl BPS when operating, or from the Pegwood tank via the Reservoir Road BPS when the Ski bowl BPS is not operating. The Sunset tank BPS can further boost pressure to the 1,000 gallon plastic storage tank at the Hilltop pumphouse, from which pressure is again boosted to the Hilltop development.

A schematic of the system is shown in Figure 1.

Figure 1: System Schematic

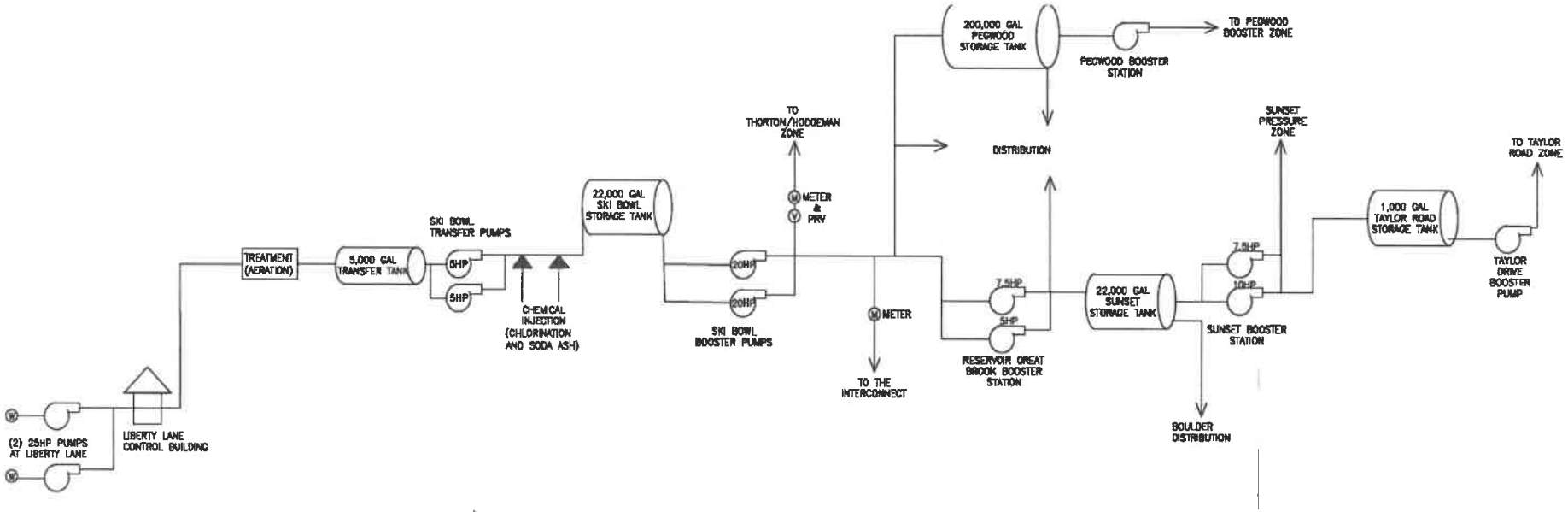

The WEVD has a SCADA system based at the Community Center by which the operator oversees pump status, tank levels, and alarm conditions. Alarms also call out to the operator's cell phone. Automatic cycling of the Liberty Lane wells is based on the water level in the 22,000-gallon tank at Snow Bowl. The Ski Bowl boosters operate based on the water level at Pegwood tank. The Reservoir Road BPS is coordinated with water level at Sunset, and the Sunset BPS operates based on the needs of the Hilltop tank.

Monitoring, Reporting, and Data Verification

Water quality monitoring records show that the system is in compliance with current standards. However, an exceedance of the 90th percentile for lead was issued in 2023 and action was required. Addition sample exceedances were discovered in 2025. The 90th percentile exceedance required the WEVD to reduce the time between all samples to every six months until enough compliant samples demonstrate reverting to (annual) reduced sampling. In addition, samples for corrosion control parameters are now required at the entry point to distribution on a bi-weekly basis and within distribution monthly. This information is reported until such time that reporting is no longer needed but sample data must still be recorded and maintained by the system. For reference, the maximum contaminant level goal for lead is zero as there is no safe level of exposure to lead.

As previously mentioned with regard to maintaining sufficient chlorine levels, daily grab samples are required if either the online chlorine analyzer or the SCADA system were to malfunction. The SCADA system has been relocated to a more secure and locked room along with PLC upgrades and putting SCADA on its own server.

Water System Management and Operation

Residential water meters were planned for installation in 2022, but this was never implemented. The WEVD has decided to switch paths to install zone meters instead. Along with recent and upcoming leak detection surveys, new mag meters were recently installed at Pegwood and Sunset Tanks/BPSs to help with water auditing. A new billing software was also purchased.

The WEVD obtained grant funding from and submitted an AMP to NHDES in April 2022.

The WEVD has continued to provide training to the system operators. This is a great way to protect the future of the water system by spreading knowledge. New management began in 2021 with the designation of a water board to work on a system plan, and the hiring of a general manager.

Staffing and Operator Certification

The WEVD is required to have operators on staff certified at the grade 1 treatment and grade 1 distribution level. The system meets this requirement. The following operator is currently listed:

Operator	Certificate No.	Treatment Level	Distribution Level
Steven Baert	3920	I	I

LRW Water Service, Inc. also provides backup operational services on an as-need basis, and other WEVD employees are currently being trained and being encouraged to obtain licensing for drinking water operations.

ACKNOWLEDGMENTS

We commend the WEVD for continuing to make many important improvements to maintain the system. These include but are not limited to:

1. Not only has the SCADA system been moved to a more secure location in its own room, put on its own server, and had its PLC upgraded, but security locks have been installed at every building. We would like to thank WEVD for taking both physical and cyber security seriously.

2. Approximately 3,300 linear feet of 4-inch water main around Pegwood was recently replaced and two new PRVs installed.

3. Efforts continue to locate buried PRV valves and install in underground structures for better access. This is important for current and future system maintenance. It is also allowing for the installation of the distribution meters which will be a great benefit in determine high water usage and/or system leaks.

RECOMMENDATIONS

Below are areas where improvements or operating adjustments are recommended, some of which could lead to significant deficiencies in the future if not addressed:

Treatment

1. RSA 485:8 states that no new construction, addition, or alteration involving the source, treatment, distribution, or storage of water in any public water system or privately owned redistribution system shall be commenced until the plans and specifications have been submitted to and approved in accordance with rules adopted by the department; except, if such construction, addition, or alteration is exempted by the department because it will have no effect on public health or welfare, then such submission and approval is not required. The WEVD shall submit a design for any upcoming changes mentioned above including switchover of chemicals.

Water System Management and Operation

2. Under the Water System Management and Operation element of the sanitary survey, NHDES requires systems to have a cybersecurity assessment performed regularly. NHDES DWGB is not privy to the results of the assessment but will ask the system to confirm if the provided recommendations are implemented. Cybersecurity risks are a substantial threat to both public health and the system's financial assets. Most importantly, the **risks are real** for <u>any size</u> system.

   We recommend the following potential (free) services (presented with contact information or links) for your system to maintain compliance with Cybersecurity requirements:

   a) CISA (Cybersecurity & Infrastructure Security Agency) offers a free physical and cyber assessment of your site against deep, comprehensive standards. Contact Rick Rossi to schedule this assessment. mailto:richard.rossi@cisa.dhs.gov

b) The Overwatch Foundation offers a free broad assessment which will determine what free services and equipment you are eligible to receive upon completion. The free follow-up services may include equipment and upgrades that would be performed alongside your SCADA integrator or IT department.
c) EPA offers free assessments for drinking water system and *Primex* insurance also offers a high-level assessment that focuses more on your organization. The Atom Group also provides cybersecurity services and can be hired to perform a custom review. NHDES is not involved with these other programs, but they could be available and viable opportunities for your system.

If you are not sure which approach you would like to take or would like more information on any of the opportunities presented, please contact Brenda Leonard at mailto:brenda.j.leonard@des.nh.gov or tel:+6032710867.

3. NHDES recommends completion of your asset management plan (AMP) to help you get the most value from each of your assets and have the financial resources to rehabilitate and replace them when necessary. Asset management helps a system make critical decisions about how to achieve and maintain the desired level of service at the lowest appropriate cost to customers. In addition, an AMP grant from NHDES can be used to convert paper drawing to electronic format. Contact Kaitlin Curits at mailto:kaitlin.e.curtis@des.nh.gov or tel:+16032712472 for more information about asset management and the NHDES AMP grant program.

Monitoring, Reporting, and Data Verification

4. Corrosion control sampling, lead sampling, and lead notifications were reviewed during this survey. Alkalinity and pH levels are required to be reported by WEVD twice per week and at two sites within distribution quarterly. Once reporting is no longer required, sampling must continue and records kept onsite. As we transition into the new 2021 federal Lead and Copper Rule Revisions (LCRR) and most recent Lead and Copper Rule Improvements (LCRI), additional action must be taken when lead samples exceed the 10 parts per billion (ppb) action level and system-wide 24-hour notification if more than 10% of samples taken exceed the limit of 15 ppb.

   NHDES assisted water systems to complete the Lead Service Line Inventory (LSLI) as part of the LCRR by the October 16, 2024 deadline. The LSLI effort consists of three parts: Inventory, Replacement Plan, and Sampling Plan. NHDES has assigned a consulting firm (Arcadis) to the WEVD to help facilitate the three-part submittals. We commend the WEVD for your efforts in completing the first task of inventory and recommend maintaining momentum to continue to identify any unknown service line materials and plan for the removal of lead components. The LCRI requires compliance of all three phases by November 1, 2027, the identification of all unknowns by 2034, and replacement of all lead and galvanized requiring replacement by 2037. There is a history of elevated lead samples at the WEVD, so the locations of lead couplings on galvanized pipe, lead services, and lead goosenecks should be identified and removed. The removal of lead in drinking water is a high priority, especially for children ages 0-6 years old who should be consuming water with non-detect levels of lead. We urge the WEVD to continue to investigate possible sources of lead and continue to update and rotate lead and copper sample locations so there is a wider range of samples throughout the distribution system.

Water Sources

5. The previously reported peak day demand (approximately 330,000 gallons in 2019 and again in 2020) exceeds the currently well pumping capacity. Maximum day demands are no longer reported, so it is unclear if that volume has been reduced through leak repair and/or other water conservation efforts. Additionally, with the largest source taken offline, a single well pump (reported capacity of 136,800 gpd) cannot meet the average day demand (140,000 gpd in 2024). The system has taken significant steps in developing a new source through the hiring of an engineering firm and obtaining land easements. We recommend that the managers of the water system continue working with their engineer toward development of another source of drinking water, which may soon be required based on existing capacity versus demand.

Distribution System

6. NHDES recommends that a system as large as the WEVD have working service meters for every service line. For WEVD, individual meters provide the opportunity to help promote water conservation by the users and may actually lead to having sufficient water supply with the existing wells if water demand can be reduced. Additionally, accurate service meters have many benefits for both the water system and customers.
   - Accurate service meters allow for better water balance calculations, which compares the water entering the distribution system with water being used by customers. The difference is water losses, such as leaks.
   - New meter technology allows water users to receive an alarm when there is a suspected leak in the vicinity or within the home. By having accurate metering, the water system can determine the amount of water that is lost and try to reduce lost water within a home through homeowner education or the lost water (and revenue) within distribution through repairs.
   - Water rates also can be more fairly distributed when they are based on water use instead of a flat rate. This can help reduce demand through customer water conservation.

   An alternative to individual water meters are zone meters. This is not as effective overall but has helped with finding system leaks for some systems. NHDES has an annual leak detection grant program that is recommended to complement your water conservation efforts. Information on this program can be found on our Water Conservation Webpage.

Finished Water Storage

7. The WEVD should consider installing a fence around the Pegwood tank to help keep animals off its roof.

8. The WEVD has two water storage tanks that require inspections which do not meet the requirement of inspection every five years. These tanks need to be removed from operation or professionally inspected. The Ski Bowl has a 5,000 gallon steel tank that is more than 20 years old and is currently used for aeration treatment for radionuclides and pH adjustment. Removal of this tank may require separate or modified existing treatment for radionuclides that have been found in the raw well water.

   The 20,000 gallon steel Sunset tank installed in 1993 is under analysis to determine if the tank can be eliminated from the system through existing booster pumping or upgrades at Reservoir Road. If the tank is determined to be needed, either replacement or professional internal and external inspected is required.

Pumps, Pump Facilities, and Controls

9. The WEVD is also considering the elimination of the Reservoir Road BPS. A hydraulic study is being engineered to determine impacts. NHDES has previously recommended possible system upgrades to reduce system pressures as a maximum system pressure of 240 psi was previously observed leaving the Reservoir Road BPS to feed Sunset Tank and the high-pressure zone. Additionally, approximately 210 psi was observed leaving the Ski Bowl BPS. These pressures are excessive, well above the maximum 100 psi standard in the Recommended Standards for Water Works referenced in rule, and a danger to the safety of those who work on the water mains. NHDES recommends the hydraulic study be analyzed for potential system upgrades that reduce pressures. Any planned upgrades that impact system hydraulics will require pressure reduction.

Staffing and Operator Certification

10. A backup operator is important to fill gaps in coverage and system knowledge. NHDES encouraged certification of existing employees and maintaining a backup operator so the District has seamless coverage of the system at all times.

If you have any questions please contact me at mailto:Randal.A.Suozzo@des.nh.gov or tel:+16032711746.

Sincerely,

Randal A. Suozzo

Randal A. Suozzo, P.E.
Drinking Water and Groundwater Bureau

ec. Steve Baert, Ron Beard; WEVD

Check Manifest - by Payee

Date: 5/15/2025 **Batch ID:** 361 **BANK OF NH - DISTRICT**

Payment #	Type	Check Date	Vendor ID	Payee			
	Invoice #		PO #	Invoice Date	Invoice Amount	Discount Taken	Amount Paid
1898	SYSTEM	**5/15/2025**	**160**	**AMAZON**			
	1747-4HPP-JYW9			5/10/2025	102.96	0.00	102.96
	01.4314.003.613 / B&G - GROUNDS REPAIRS & MAINTENANCE					102.96	
	2 American Flags						
	196T-6HH9-DQLN			5/12/2025	21.45	0.00	21.45
	01.4314.003.614 / B&G - CLEANING SUPPLIES					21.45	
	55 Gallon Trash Bags						
	1FR7-H4QT-F3PO			5/12/2025	36.47	0.00	36.47
	01.4524.003.631 / POOL - POOL REPAIRS & MAINTENANCE					20.89	
	O Ring Kit						
	01.4524.003.631 / POOL - POOL REPAIRS & MAINTENANCE					15.58	
	16 pk Bearings, 10 pcs Bearings						
	1HCH-16RW-71MM			5/12/2025	697.00	0.00	697.00
	01.4314.003.612 / B&G - LARGE TOOLS					498.00	
	Electric Stair Climbing Hand Truck						
	01.4314.003.612 / B&G - LARGE TOOLS					199.00	
	Shipping						
	1KKK-LMT3-FCMJ			5/12/2025	15.99	0.00	15.99
	01.4314.003.614 / B&G - CLEANING SUPPLIES					15.99	
	1 Duster Head						
	1M4N-MQ6M-6V9G			5/09/2025	52.00	0.00	52.00
	01.4314.003.609 / B&G - DEPT UNIFORMS					52.00	
	Heavy Duty PVC Coated Protective Raincoat - Green						
	1N9L-QRN1-F99N			5/12/2025	81.32	0.00	81.32
	01.4524.003.618 / POOL - POOL CHEMICALS & SUPPLIES					32.99	
	Skimmer Rake						
	01.4524.003.618 / POOL - POOL CHEMICALS & SUPPLIES					21.99	
	Telescopic Pole						
	01.4524.003.618 / POOL - POOL CHEMICALS & SUPPLIES					26.34	
	12 Foot Pole (3 piece)						
	1Y4C-LCCX-9P7H			5/12/2025	69.95	0.00	69.95
	01.4314.003.611 / B&G - SMALL TOOLS					69.95	
	Tool Box Organizer						
	1YMH-CJGW-6TKR			5/05/2025	180.68	0.00	180.68
	01.4524.003.618 / POOL - POOL CHEMICALS & SUPPLIES					180.68	
	Taylor Technologies Reagent Liquid (16)						

Check Manifest - by Payee

Date: 5/15/2025 **Batch ID:** 361 **BANK OF NH - DISTRICT**

Payment #	Type	Check Date	Vendor ID	Payee			
	Invoice #		PO #	Invoice Date	Invoice Amount	Discount Taken	Amount Paid
				Total Check #:	**1898**		**1,257.82**
1899	SYSTEM	**5/15/2025**	**8990**	**BADGER METER**			
	80193972			4/29/2025	7.84	0.00	7.84
		02.4331.520.670 / WTR - SUBSCRIPTION & DUES				7.84	
		Orion Cellular Lte Service Unit					
				Total Check #:	**1899**		**7.84**
1900	SYSTEM	**5/15/2025**	**9693**	**CITIZENS BANK**			
	3 LAKES LANDSCAPING			5/06/2025	150.00	0.00	150.00
		01.4314.003.617 / B&G - LANDSCAPING				150.00	
		50 bags 3 yards Garden Mix					
	ACE HARDWARE 4/28/25			4/28/2025	143.96	0.00	143.96
		01.4130.002.609 / EXEC - UNIFORMS				143.96	
		S-Force Sun Logo, 2 Canvas Work Short LB & Sweatshirt					
	ADOBE 4-29-25			4/29/2025	19.99	0.00	19.99
		01.4130.002.320 / EXEC - LICENSES & FEES				19.99	
		Monthly Fee for Adobe					
	ALSCO ORDER AP-4977			4/11/2025	259.60	0.00	259.60
		01.4524.003.631 / POOL - POOL REPAIRS & MAINTENANCE				259.60	
		20 - 2" PVC 90 degree & 10 - 2" PVC Tee					
	AUTHORIZE NET 4-8-25			4/08/2025	-25.00	0.00	-25.00
		01.4520.002.320 / REC - LICENSES & FEES				-25.00	
		Credit refund for March 2025					
	CENTER PLATE @ JIMINY F			4/21/2025	89.50	0.00	89.50
		01.4314.002.240 / B&G - EDUCATION				89.50	
		One Meal for two					
	CLOUD CO' 'R 4-17-25			4/17/2025	18.95	0.00	18.95
		01.4130.002.320 / EXEC - LICENSES & FEES				18.95	
		Cloud Cover Music					
	CROWN AWARDS			4/28/2025	410.99	0.00	410.99
		03.4523.003.612 / LNG - EVENT EXPENSES				410.99	
		Various Fish for Fishing Derby					
	FRITOLAY 1536630203S			4/29/2025	150.66	0.00	150.66
		03.3409.001.002 / COG - FOOD				150.66	

Check Manifest - by Payee

Date: 5/15/2025 **Batch ID:** 361 **BANK OF NH - DISTRICT**

Payment #	Type	Check Date	Vendor ID	Payee	Invoice #	PO #	Invoice Date	Invoice Amount	Discount Taken	Amount Paid
				Various Snacks						
				GOOGLE 5235765668			4/30/2025	115.20	0.00	115.20
				01.4130.002.320 / EXEC - LICENSES & FEES						115.20
				4/1/25 - 4/30/25 Google						
				GOOGLE 5237371158			4/30/2025	1,011.00	0.00	1,011.00
				01.4130.002.320 / EXEC - LICENSES & FEES						1,011.00
				4/1/25 - 4/30/25 Google Workspace						
				HARBOR FREIGHT 0141130			5/04/2025	287.97	0.00	287.97
				01.4314.003.611 / B&G - SMALL TOOLS						269.99
				Portable Hydraulic Equip						
				01.4314.003.611 / B&G - SMALL TOOLS						17.98
				High Power Trigger Clamps						
				JAKES MARKET IRVING			4/21/2025	30.00	0.00	30.00
				01.4314.003.826 / B&G - VEHICLE MAINTENANCE						30.00
				10.348 Gallons FJ Fuel						
				JIMINY PEAK 4-21-25			4/21/2025	488.81	0.00	488.81
				01.4314.002.240 / B&G - EDUCATION						488.81
				LMS Lodging Balance						
				MARKET BASKET 5/2/25			5/02/2025	49.81	0.00	49.81
				03.4523.002.610 / LNG - BAR SUPPLIES						49.81
				Groceries and Produce for Bar						
				NATIONWIDE AQUATIC COI			4/11/2025	395.00	0.00	395.00
				01.4314.002.240 / B&G - EDUCATION						395.00
				1 - CPO Training for Heather Kennedy						
				NHDES PO# 124912			4/23/2025	256.23	0.00	256.23
				01.4524.003.820 / POOL - POOL & SPA INSPECTIONS						256.23
				PBF Self Certification Declaration and Leis Nemis Fee						
				NORTHEAST RECORD 3470			4/29/2025	40.50	0.00	40.50
				01.4130.002.620 / EXEC - MISCELLANEOUS EXPENSE						40.50
				Pickup, shred & replace bag - Community Center						
				PUTNEY SUNOCO 4/21/25			4/21/2025	21.41	0.00	21.41
				01.4314.003.823 / B&G - VEHICLE FUEL						21.41
				7 Gallons Gas						
				SPECTRUM 20530042725			4/27/2025	597.19	0.00	597.19
				01.4520.002.345 / REC - CABLE						178.00
				4/27/25 - 5/26/35 Service - Cable						

Check Manifest - by Payee

Date: 5/15/2025 **Batch ID:** 361 **BANK OF NH - DISTRICT**

Payment #	Type	Check Date	Vendor ID	Payee				
	Invoice #		PO #		Invoice Date	Invoice Amount	Discount Taken	Amount Paid
			01.4520.002.344 / REC - INTERNET					115.00
			4/27/25 - 5/26/35 Service - Internet					
			01.4130.002.350 / EXEC - TELEPHONE & INTERNET					115.00
			4/27/25 - 5/26/35 Service - Internet					
			01.4130.002.350 / EXEC - TELEPHONE & INTERNET					25.00
			4/27/25 - 5/26/35 Service					
			01.4520.002.350 / REC - TELEPHONE					25.00
			4/27/25 - 5/26/35 Service					
			01.4130.002.350 / EXEC - TELEPHONE & INTERNET					25.00
			4/27/25 - 5/26/35 Service					
			01.4520.002.350 / REC - TELEPHONE					25.00
			4/27/25 - 5/26/35 Service					
			01.4520.002.350 / REC - TELEPHONE					25.00
			4/27/25 - 5/26/35 Service					
			01.4130.002.350 / EXEC - TELEPHONE & INTERNET					25.00
			4/27/25 - 5/26/35 Service					
			01.4520.002.345 / REC - CABLE					33.00
			4/27/25 - 5/26/35 Service					
			01.4520.002.350 / REC - TELEPHONE					3.09
			4/27/25 - 5/26/35 Service					
			01.4130.002.350 / EXEC - TELEPHONE & INTERNET					3.10
			4/27/25 - 5/26/35 Service					
	SPECTRUM 35967041425				4/14/2025	561.14	0.00	561.14
			01.4522.002.350 / SKI - CABLE, INTERNET & PHONE					561.14
			4/14/25 - 5/13/2025 Service					
	SPECTRUM 46907041225				4/12/2025	234.46	0.00	234.46
			01.4312.002.350 / HWY - TELEPHONE & INTERNET					234.46
			4/12/25 - 5/11/25 Service					
	TOUCH BISTRO 1229673				4/30/2025	9.95	0.00	9.95
			01.4130.002.320 / EXEC - LICENSES & FEES					9.95
			4/30/25 - 5/30/25 Charge Summary Community Center					
	TOUCH BISTRO 1234353				5/02/2025	9.95	0.00	9.95
			01.4130.002.320 / EXEC - LICENSES & FEES					9.95
			TB Charge Summary - Ski Area					
	US POSTAL SERVICE 4-9-2!				4/09/2025	62.65	0.00	62.65
			02.4331.520.625 / WTR - POSTAGE					62.65
			Postage - Collection letters - Water					
	US POST SERVICE 4/11/202				4/11/2025	292.00	0.00	292.00

Check Manifest - by Payee

Date: 5/15/2025 **Batch ID:** 361 **BANK OF NH - DISTRICT**

Payment #	Type	Check Date	Vendor ID	Payee				
	Invoice #		PO #		Invoice Date	Invoice Amount	Discount Taken	Amount Paid
		02.4331.520.625 / WTR - POSTAGE					73.00	
		Postage Stamps - District & Water						
		01.4130.002.625 / EXEC - POSTAGE					219.00	
		Postage Stamps - District & Water						
	WALMART 4/21/25				4/21/2025	371.76	0.00	371.76
		03.4523.002.611 / LNG - KITCHEN SUPPLIES					371.76	
		Wire Racks all sizes						
	WALMART 4/8/25				4/08/2025	49.76	0.00	49.76
		01.4130.002.610 / EXEC - OFFICE SUPPLIES					49.76	
		Various Office Supplies						
	WALMART 4/9/25				4/09/2025	17.35	0.00	17.35
		01.4130.002.610 / EXEC - OFFICE SUPPLIES					17.35	
		Calculator and Post It Tabs						
						Total Check #:	**1900**	**6,120.79**
1901	SYSTEM	**5/15/2025**	**810**	**C M WHITCHER RUBBISH REMOVAL LLC**				
	3837				5/01/2025	943.80	0.00	943.80
		01.4314.003.616 / B&G - TRASH REMOVAL					314.60	
		Service Schedule - 10 yard Bi-Weekly						
		03.4522.003.491 / SKI - TRASH REMOVAL					629.20	
		Service Schedule - 8 yard Weekly						
						Total Check #:	**1901**	**943.80**
1902	SYSTEM	**5/15/2025**	**2630**	**HEALTH TRUST**				
	88274				4/08/2025	465.75	0.00	465.75
		01.2020.000.010 / FLEX SPENDING WITHHELD					457.50	
		FSA Claims Reimbursements PY2025FSA Claims Reimbursements PY2024						
		01.4130.002.320 / EXEC - LICENSES & FEES					8.25	
		FSA Admin Fee						
	88873				5/06/2025	8.25	0.00	8.25
		01.4130.002.320 / EXEC - LICENSES & FEES					8.25	
		FSA Admin Fee						
						Total Check #:	**1902**	**474.00**
1903	ACH	**5/15/2025**	**4230**	**NH RETIREMENT SYSTEM**				***ACH***

Check Manifest - by Payee

Date: 5/15/2025 **Batch ID:** 361 **BANK OF NH - DISTRICT**

Payment #	Type	Check Date	Vendor ID	Payee			
	Invoice #		PO #	Invoice Date	Invoice Amount	Discount Taken	Amount Paid
	133534			5/13/2025	13,982.27	0.00	13,982.27
	01.2020.000.007 / NHRS PAYABLE					13,982.27	
	NH Retirement Monthly Payment						
					Total Check #:	**1903**	**13,982.27**
1904	SYSTEM	**5/15/2025**	**9745**	**POOLZOOM**			
	77013391			5/09/2025	85.72	0.00	85.72
	01.4524.003.631 / POOL - POOL REPAIRS & MAINTENANCE					55.92	
	4 - Gear For Drive Motor Unit						
	01.4524.003.631 / POOL - POOL REPAIRS & MAINTENANCE					29.80	
	2 - Dophin Rapid Drain Flap						
					Total Check #:	**1904**	**85.72**
1905	SYSTEM	**5/15/2025**	**8690**	**THE WHEELERSVT PRODUCTIONS**			
	F6401375-0052AC-2			5/14/2025	350.00	0.00	350.00
	03.4523.003.611 / LNG - ENTERTAINMENT					350.00	
	Arthur James Entertainment 5/22/25						
					Total Check #:	**1905**	**350.00**
1906	SYSTEM	**5/15/2025**	**9490**	**TREASURER, STATE OF NH**			
	206236			4/28/2025	15.00	0.00	15.00
	02.4331.520.860 / WTR - WATER TESTING					15.00	
	WELL Sample - DW Bacteria, P/A, CHR, Aqueous						
	206238			4/28/2025	30.00	0.00	30.00
	02.4331.520.860 / WTR - WATER TESTING					30.00	
	4/24/25 - 3 samples - DW Bacteria, P/A, CHR, Aqueous						
					Total Check #:	**1906**	**45.00**
1907	SYSTEM	**5/15/2025**	**6240**	**UPTON & HATFIELD, LLP**			
	BILL # 173696			5/06/2025	1,272.00	0.00	1,272.00
	01.4130.002.323 / EXEC - LEGAL SERVICES					1,272.00	
	General Professional Services - RTK issues, District issues and Employment Contr						
					Total Check #:	**1907**	**1,272.00**

Check Manifest - by Payee

Date: 5/15/2025 **Batch ID:** 361 **BANK OF NH - DISTRICT**

Payment #	Type	Check Date	Vendor ID	Payee	Invoice #	PO #	Invoice Date	Invoice Amount	Discount Taken	Amount Paid
5/15/2025	**Check Manifest**		**Batch:**	**361**	**Chk Count:**	**10**	**Total Amnt:**			**24,539.24**

--- Subtotals by Fund ---

Fund	Description	Amount
01	VILLAGE DISTRICT FUND	22,388.33
02	WATER FUND	188.49
03	RECREATION FUND	1,962.42

--- Signatures ---

Ron Beard, General Manager

Maureen Patti, Commissioner-Chair

Mark Canfield, Commissioner

Gerald Panuczak, Commissioner

M. Patti DRAFT VALUES FOR LEGISLATIVE ADVOCACY

1. Support greater efficiency in Municipal Operations (i.e., streamlining notice publication requirements) and retaining/maintaining local authority
2. Support legislation which improves clarity for RTK compliance practices, reduces the burden for RTK responsibilities while retaining transparency & access, and provides for municipalities, including a Village District, the ability to recover costs for excessive/commercial requests
3. Support advocacy & legislation which maintains State-level revenue sources for Towns and Village Districts including, specifically, legislation which provides access for Village Districts to a share of the Rooms & Meals tax distributed to municipalities
4. Oppose legislation which increases employer current/future NHRS costs and support requiring an actuarial analysis of legislation that may increase municipal employer NHRS contribution rates
5. Protect advocacy for local municipalities by organizations such as NHMA
6. Support legislation which provides state and/or federal investment in water infrastructure

DRAFT

May 7, 2025 Minute Amendments Proposed by M. Canfield

1. Line 94: remove "will" between research and needs
2. Line 154: delete "of what is" and capitalize "included"
3. Line 155: delete the s from outlines
4. Line 160: question, delete the plural
5. Line 162: change were to was